Not for print

Paper size: A4, size:1399.00 x633.49 mm

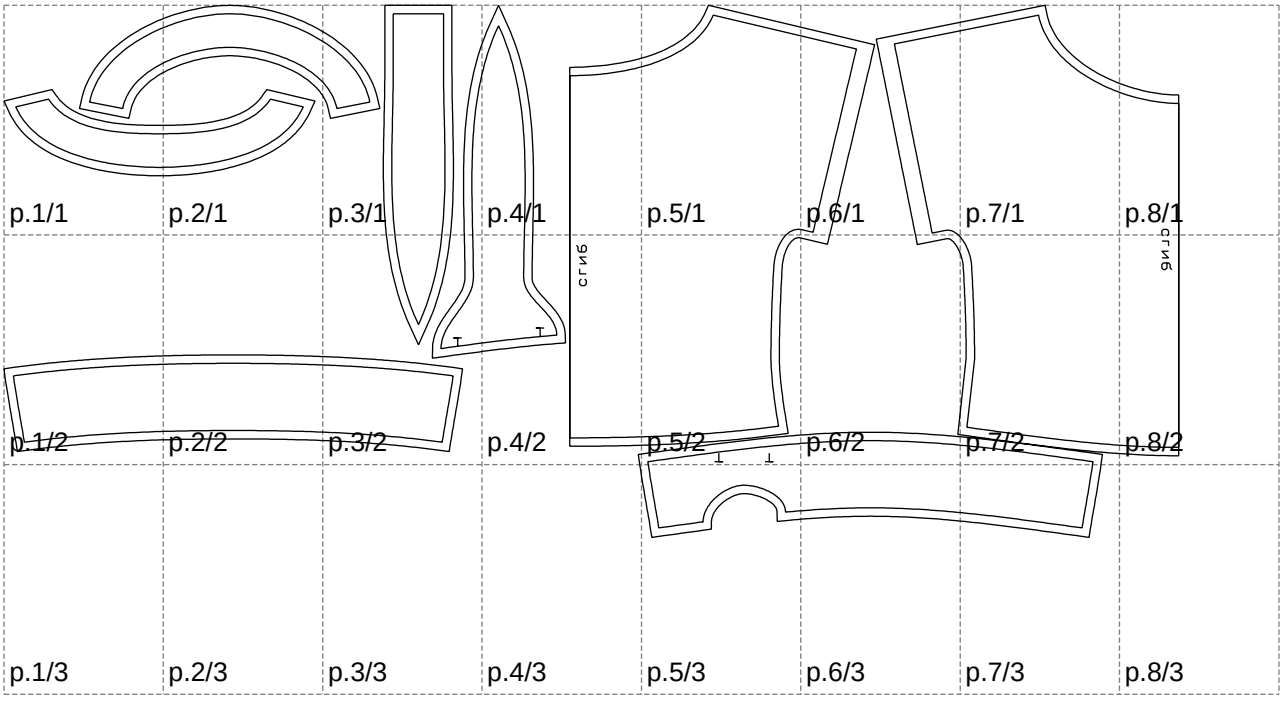

Example

size:1499.00 x969.53 mm

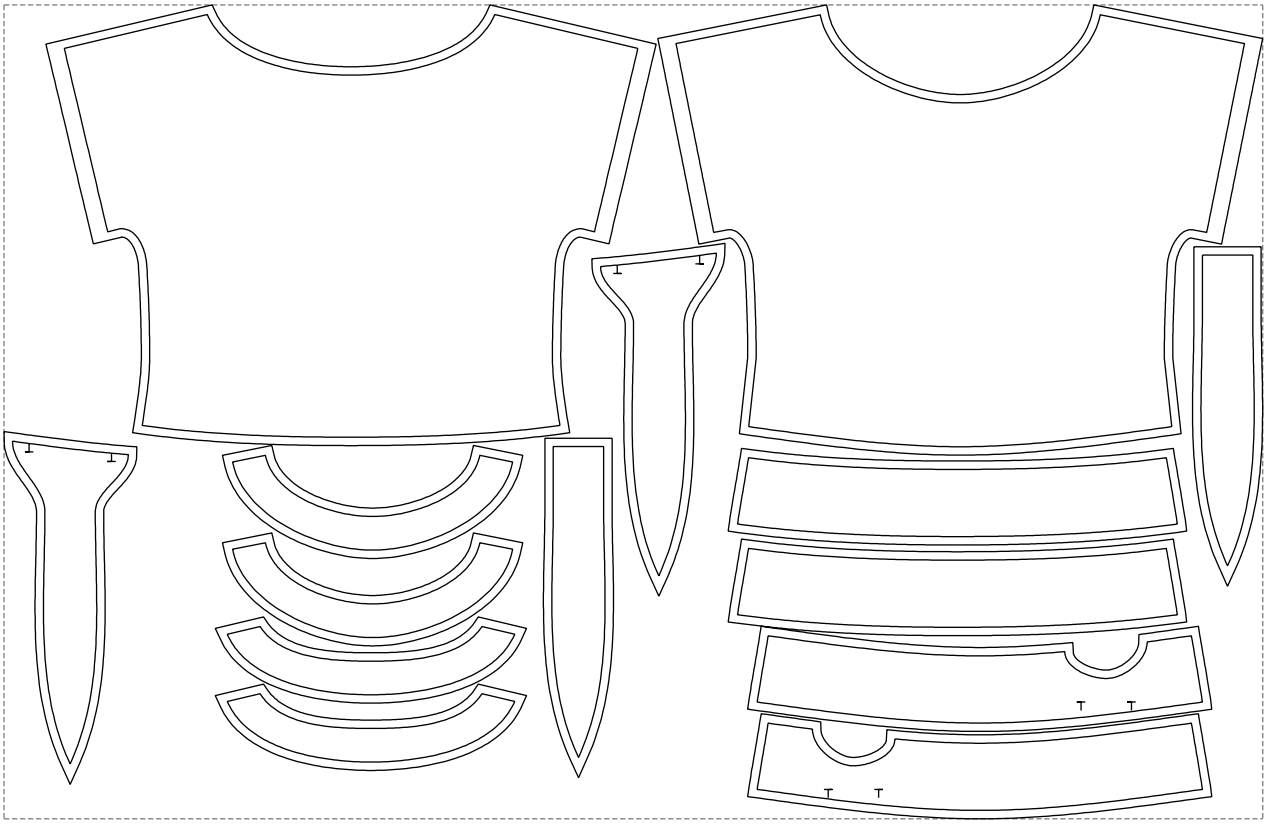

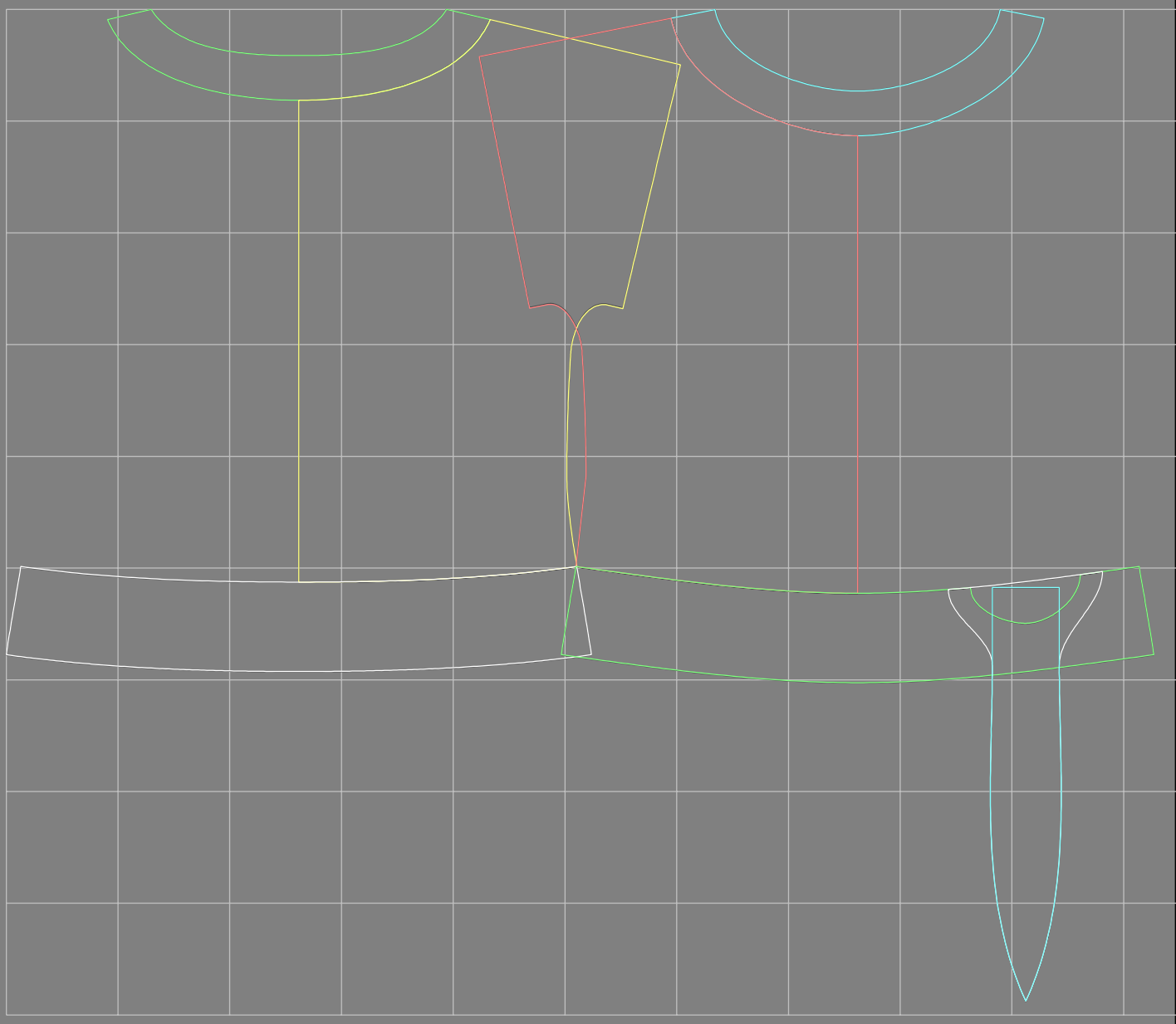

Maneken =1 ver.0

rz_1=170 rz_16=92 rz_17=78.8 rz_18=71.8 rz_19=100 rz_20=98.1

. . . . . .

. . . . . .

. . . . . .