Not for print

Paper size: A4, size:1399.00 x1808.00 mm

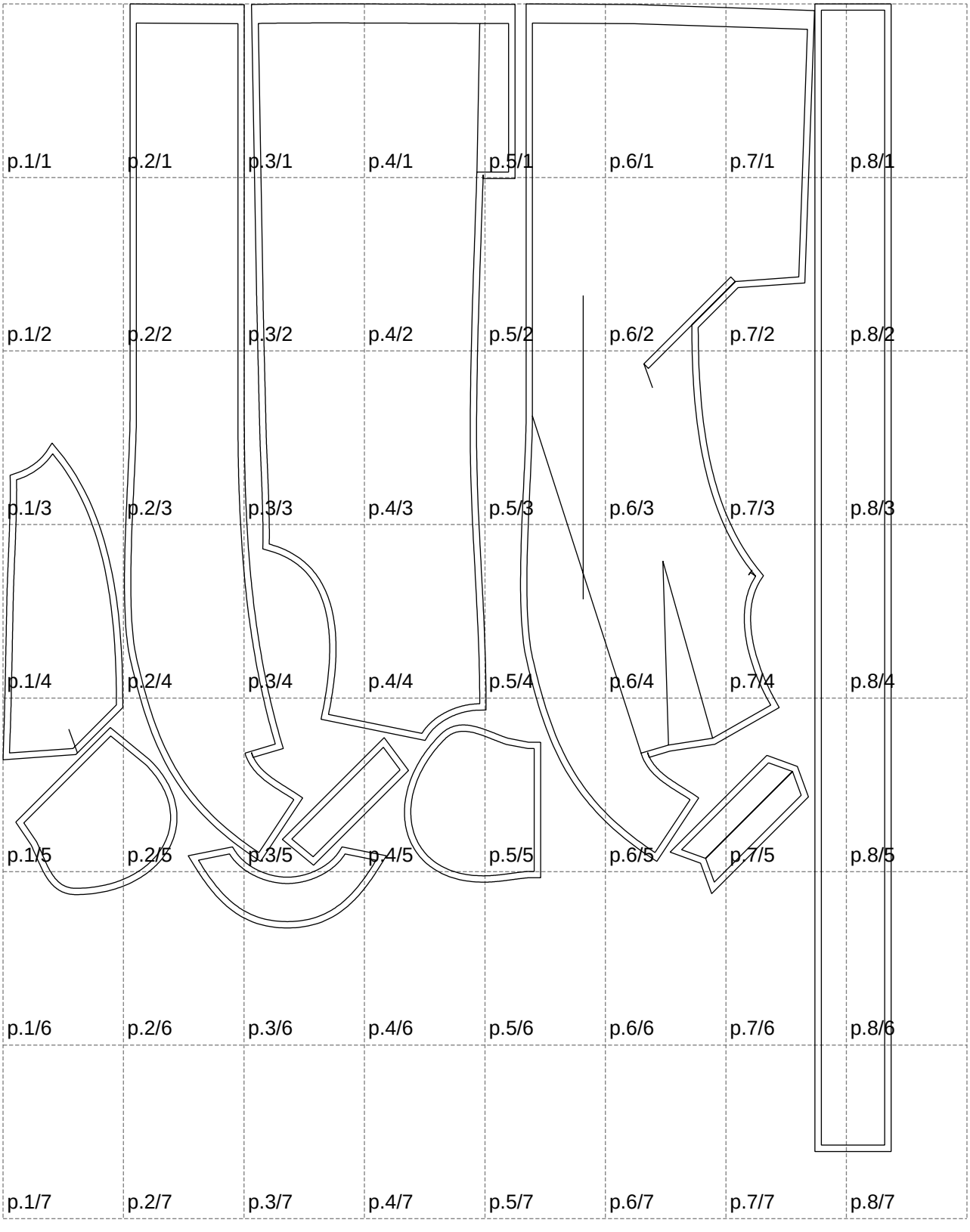

Example

size:1488.96 x2704.51 mm

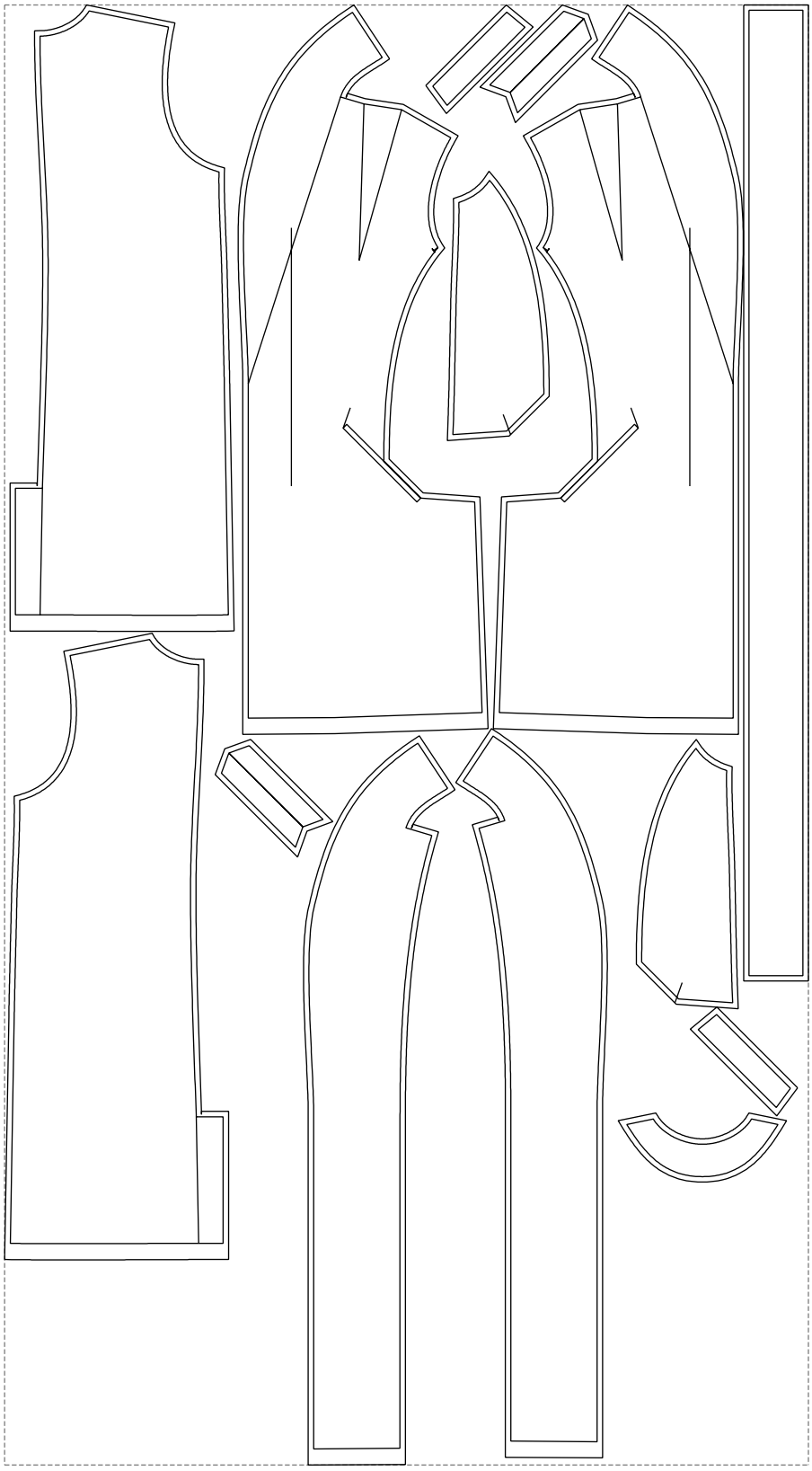

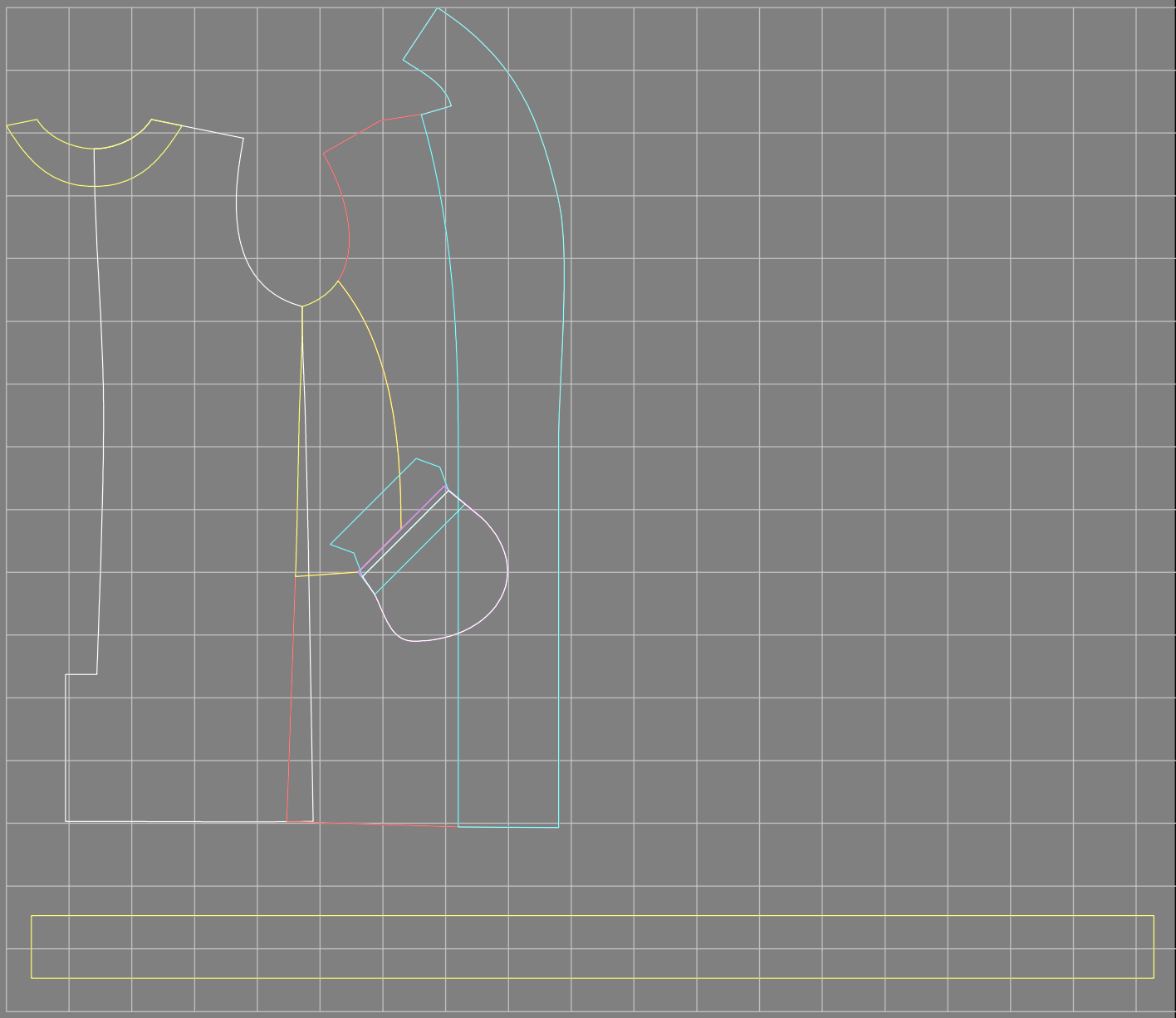

Maneken =1 ver.0

rz_1=170 rz_16=116 rz_17=100 rz_18=98.8 rz_19=124 rz_20=121

. . . . . .

. . . . . .

. . . . . .